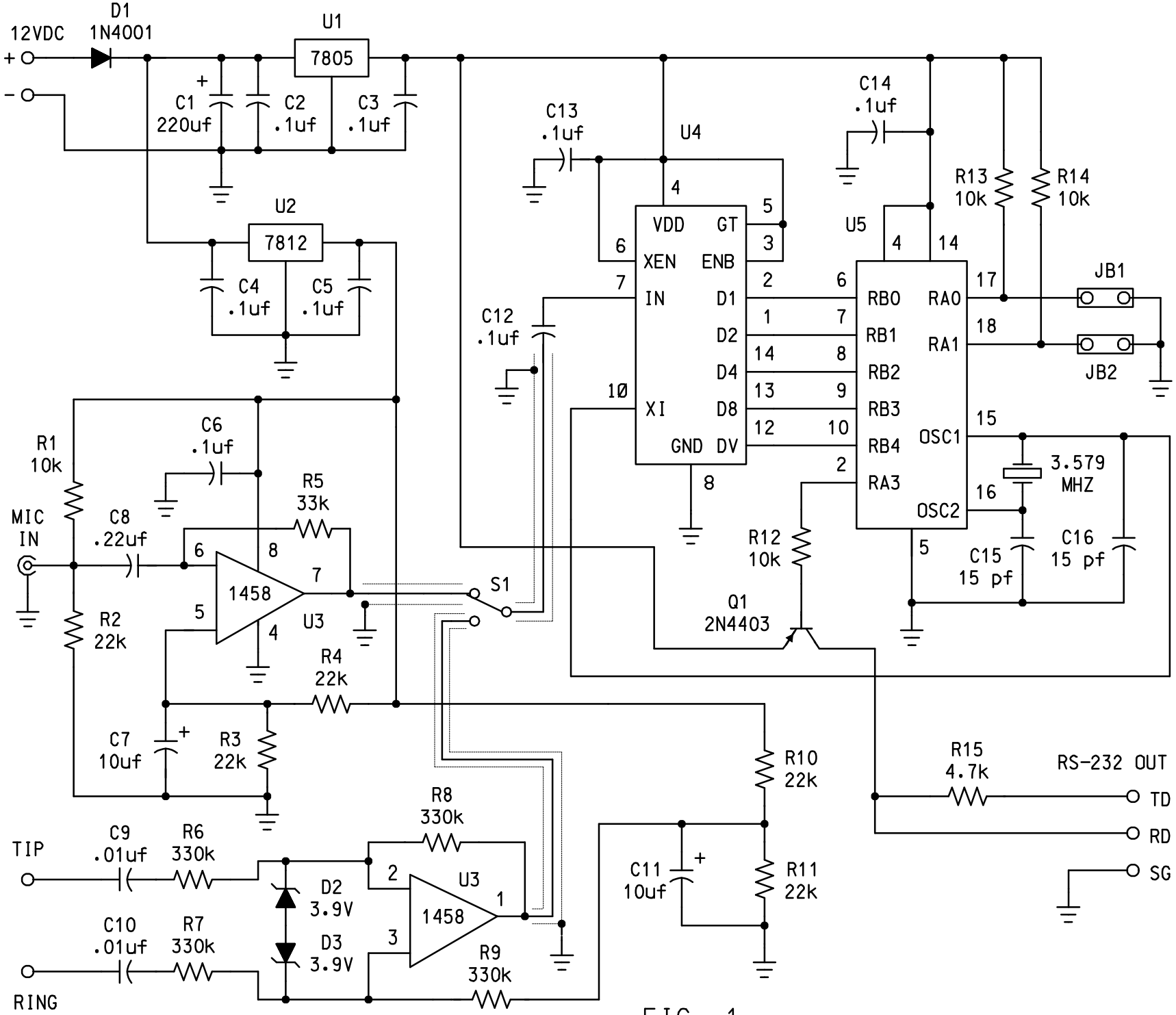
12VDC
+
-
D1
1N4001
U1
7805
C1
220uf
C2
.1uf
C3
.1uf
U2
7812
C4
.1uf
C5
.1uf
C13
.1uf
U4
VDD
GT
XEN
ENB
IN
D1
D2
D4
D8
XI
GND
DV
C12
.1uf
C14
.1uf
U5
RB0
RB1
RB2
RB3
RB4
RA3
RA0
RA1
OSC1
OSC2
R13
10k
R14
10k
JB1
JB2
3.579
MHZ
C15
15 pf
C16
15 pf
R12
10k
Q1
2N4403
R1
10k
C6
.1uf
R5
33k
MIC
IN
C8
.22uf
1458
U3
S1
R2
22k
R4
22k
C7
10uf
R3
22k
R10
22k
R15
4.7k
RS-232 OUT
TD
RD
SG
R8
330k
TIP
C9
.01uf
R6
330k
D2
3.9V
U3
1458
C11
10uf
R11
22k
C10
.01uf
R7
330k
D3
3.9V
R9
330k
RING

FIG. 1